REMOVAL AND INSTALLATION CLEARANCE			
PART/ASSEMBLY	DIMENSION	DIRECTION*	DESCRIPTION
TRANSMISSION	106.0 (4.17)	HORIZONTAL	DISTANCE REQUIRED TO REMOVE TRANSMISSION
FILTERS - DEEP SUMP	211.0 (8.31)	VERTICAL	CLEARANCE REQUIRED BELOW CONTROL MODULE FOR FILTER AND COVER REMOVAL
FILTERS - SWALLOW SUMP	167.0 (6.57)	VERTICAL	CLEARANCE REQUIRED BELOW CONTROL MODULE FOR FILTER AND COVER REMOVAL
MAIN PRESSURE TAPS	38.0 (1.50)	PERPENDICULAR	CLEARANCE REQUIRED FROM CONTROL MODULE FOR PLUG REMOVAL
DRAIN PLUG	24.8 (.98)	VERTICAL	CLEARANCE REQUIRED BELOW CONTROL MODULE FOR PLUG REMOVAL
SPEED SENSOR CONNECTOR	SEE DRAWING AS67-431		CLEARANCE REQUIRED TO REMOVE WIRING HARNESS FROM SPEED SENSOR
*TRANSMISSION VIEWED FROM THE SIDE			

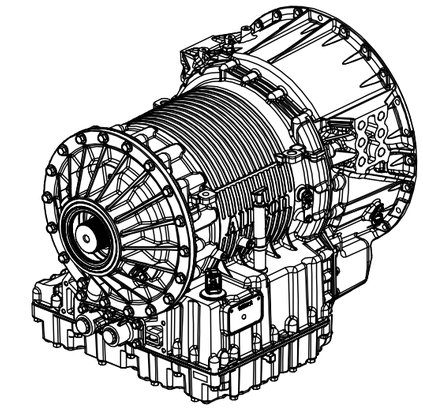

ISOMETRIC VIEW

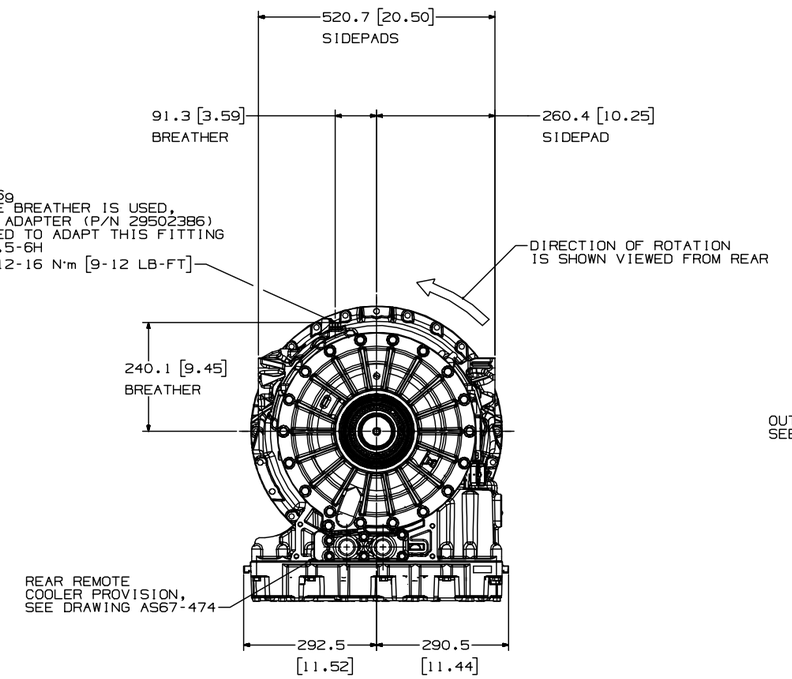

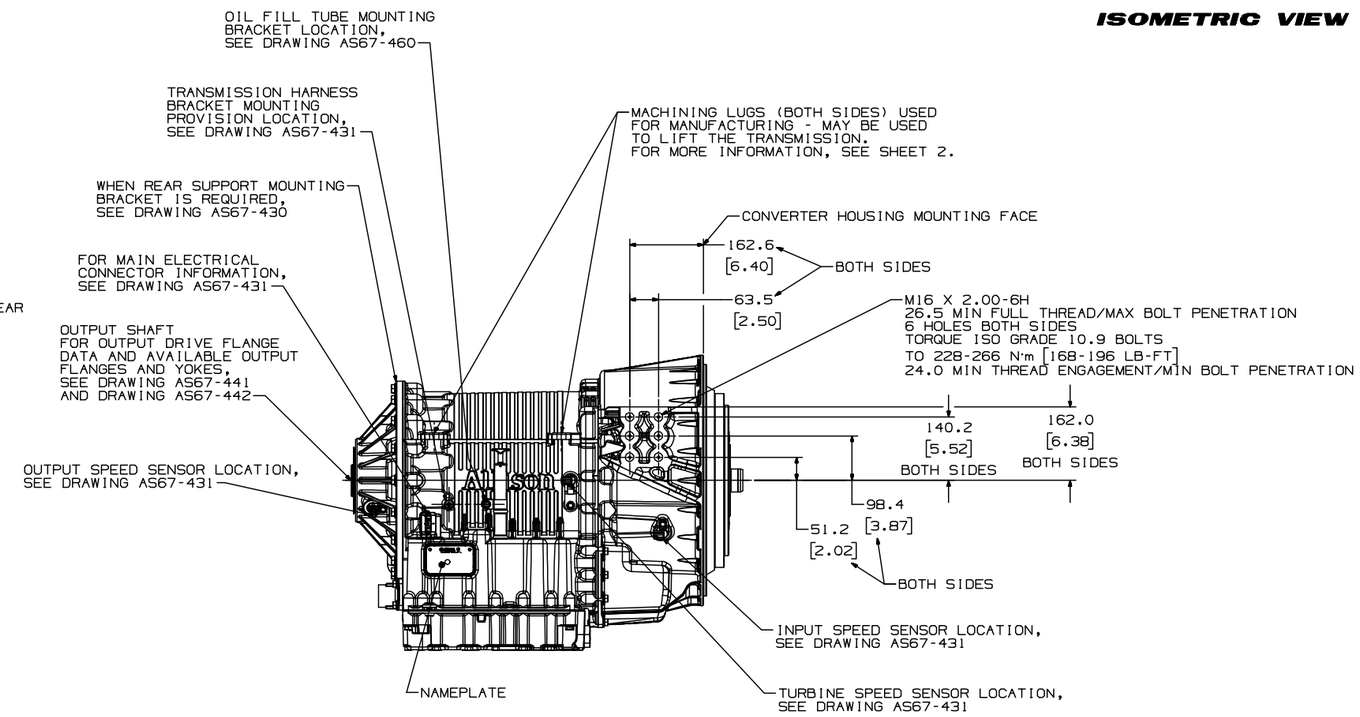

TORQUES SHOWN ARE FOR PLAIN (NON-PLATED) FASTENERS AND OTHER THREADED COMPONENTS SUPPLIED AND INSTALLED BY THE VEHICLE BUILDER. TORQUE REQUIREMENTS SHOULD BE REVIEWED IF PLATED FASTENERS WILL BE USED, CONSULT THE SUPPLIER.

FOR TRANSMISSION SPECIFICATIONS NOT SHOWN, SEE 4000 PRODUCT FAMILY TRANSMISSION DATA SECTION.

FOR WIRING HARNESS INFORMATION, REFER TO TECHNICAL DOCUMENT 173 (TD 173)

FOR CONTROLS INFORMATION REFER TO ALLISON CONTROLS TECH DATA

FOR RETARDER OPTION, SEE DRAWING AS67-418.

NON-PTO CONFIGURATION SHOWN, FOR ADDITIONAL PTO OPTION INFORMATION, SEE DRAWING AS66-485.

DIMENSIONS SHOWN IN PARENTHESES ARE IN INCHES, AND FOR REFERENCE ONLY.

REV	DESCRIPTION	DATE	DWN	CHK
B	(1) UPDATED TO THE LATEST HARDWARE NEW CONVERTER HOUSING CASTING AND BREATHER LOCATION (2) REVISED CONVERTER HOUSING SIDEPADS M16 X 2.00-6H HOLE BOLT CALLOUT	22MR17	RHAS	
A	(1) UPDATED TO THE LATEST BREATHER HARDWARE	12MY17	RHJH	

REVISIONS

FR2

NX

SPECIFIED DIMENSIONS HAVE PRECEDENCE OVER COMPUTER GENERATED DATA

CHANGE RESTRICTED

METRIC

THIRD ANGLE

DRAWN	R. HIGGINS
DATE	13FE14
CHECKED	J. HALEY
DATE	11OC16
APPROVED	
DATE	
PROJ. ENGR.	J. HALEY
DATE	11OC16
APPL. ENGR.	T. BROWN
DATE	11OC16

Allison Transmission.
Indianapolis, Indiana, USA

INSTL DWG, BASIC 6-SPEED

MODEL 4000 PRODUCT FAMILY

SIZE	CAGE CODE	DWG NO
R	73342	AS67-416

SCALE NONE

SHEET 1 OF 2

THE INFORMATION CONTAINED HEREIN IS PROPRIETARY AND THE PROPERTY OF ALLISON TRANSMISSION, INC AND MAY NOT BE REPRODUCED, DISCLOSED OR USED FOR ANY PURPOSE OTHER THAN A QUOTATION TO OR ON ORDER FROM ALLISON TRANSMISSION, INC WITHOUT THE SPECIFIC WRITTEN AUTHORIZATION OF ALLISON TRANSMISSION, INC.

FR1 DWG. NO. AS67-416 LTR B SH 1

DWG NO AS67-416

CURRENT STATUS:
RX-Released - EXP

TRANSMISSION CONFIGURATION	DIMENSION A	DIMENSION B	DIMENSION C	DIMENSION D	DIMENSION E	DIMENSION F	DIMENSION G	DIMENSION H	DIMENSION J	DIMENSION K	DIMENSION L
NO PTO	775.7 [30.54]	766.4 [30.17]	687.1 [27.05]	231.0 [9.10]	624.4 [24.56]	384.4 [15.13]	363.9 [14.33]	217.4 [8.56]	312.9 [12.32]	592.9 [23.34]	715.3 [28.16]
WITH PTO	848.7 [33.41]	839.4 [33.05]	760.1 [29.93]	304.0 [11.97]	697.4 [27.46]	457.4 [18.01]	436.9 [17.20]	290.4 [11.43]	385.9 [15.19]	665.9 [26.22]	788.3 [31.04]
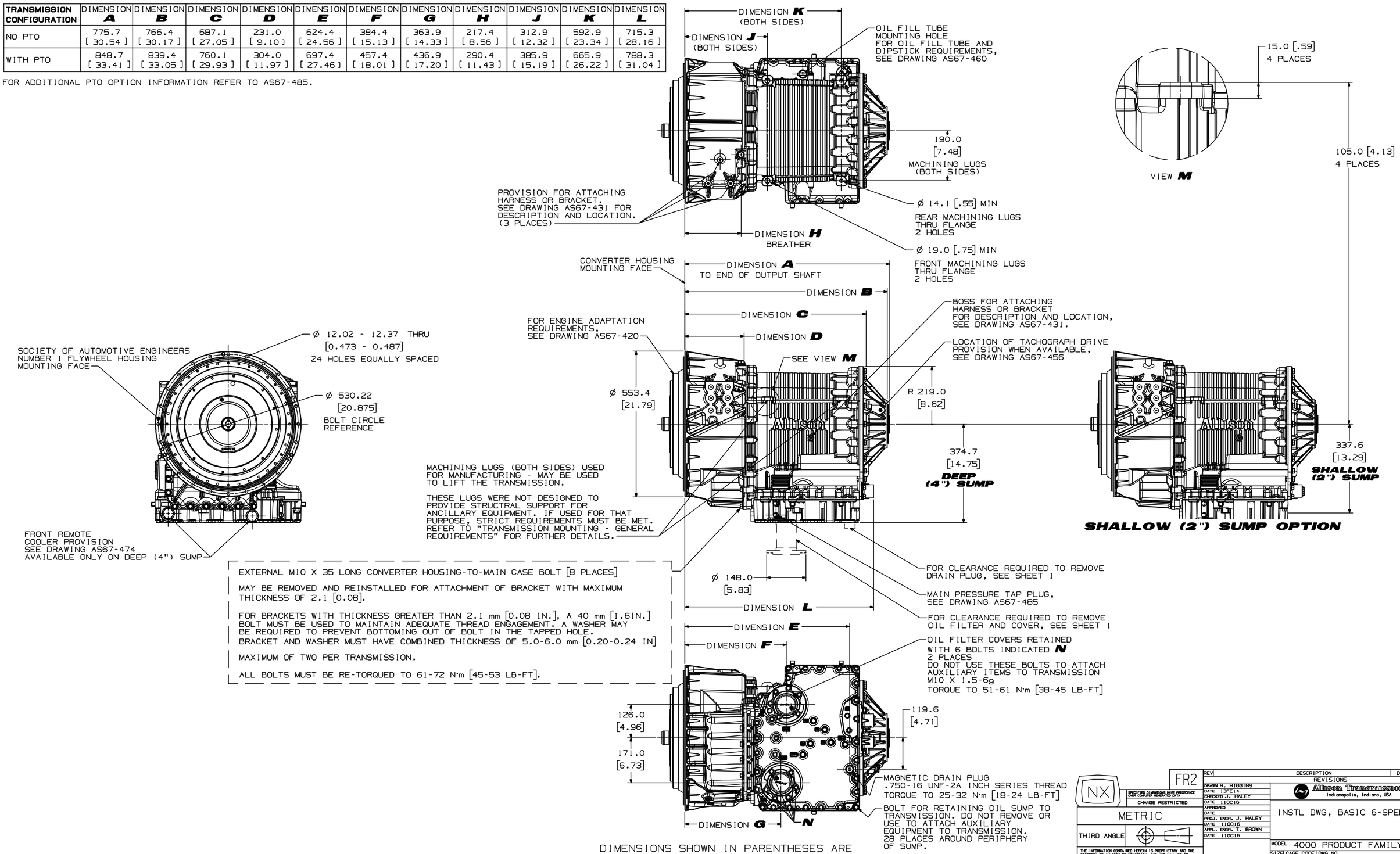
FOR ADDITIONAL PTO OPTION INFORMATION REFER TO AS67-485.